NOTES:

1. THE HOURLY F RATING OF THE FIRESTOP SYSTEM IS 1 HR WHEN INSTALLED IN A 1 HR FIRE RATED WALL AND 2 HR WHEN INSTALLED IN A 2 HR FIRE RATED WALL.
2. PIPE HANGER INSTALLATION SHALL BE IN ACCORDANCE REQUIREMENTS PER U.L. LISTING OR APPROVED EQUAL.
3. REFER TO ARCHITECTURAL SHEETS FOR LOCATION OF ALL FIRE-RATED WALLS.

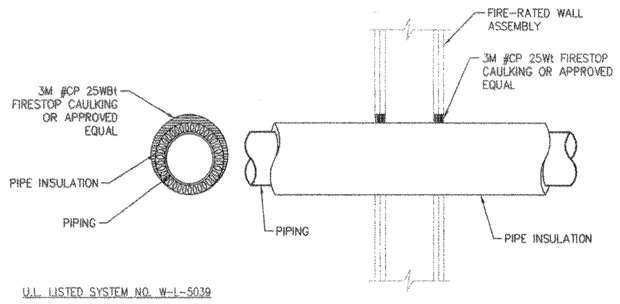

U.L. LISTED SYSTEM NO. W-L-5039

F RATINGS - 1 AND 2 HR
T RATINGS - 3/4, 1 AND 1-1/2 HR

INSULATED PIPE THRU FIRE-RATED WALL — SCALE NONE — 4

NOTES:

1. REFER TO 3M MANUFACTURER'S LITERATURE FOR ADDITIONAL REQUIREMENTS PER U.L. LISTING OR APPROVED EQUAL.
2. PIPING SUPPORT NOT SHOWN. REFER TO OTHER DETAILS AND SPECIFICATIONS.

U.L. LISTED SYSTEM NO. C-AJ-5001

F RATINGS - 1-1/2, 2 AND 3 HR
T RATING - 0, 1/2, 3/4 AND 1 HR
L RATING AT AMBIENT - 2 CFM PER SQ. FT.
L RATING AT 400 F - LESS THAN 1 CFM PER SQ.FT.

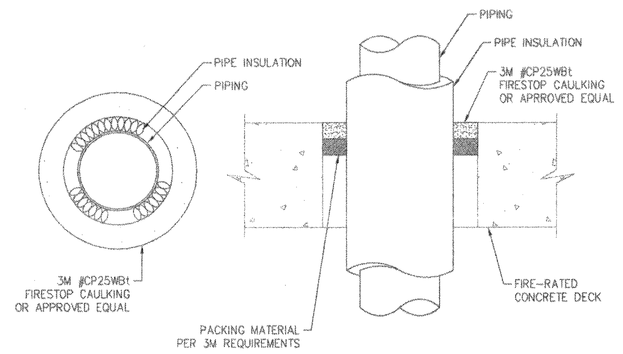

INSULATED PIPE THRU FIRE RATED FLOOR/CEILING — SCALE NONE — 3

NOTES:

1. REFER TO 3M MANUFACTURER'S LITERATURE FOR ADDITIONAL REQUIREMENTS PER U.L. LISTING, OR APPROVED EQUAL.
2. PIPING SUPPORT NOT SHOWN. REFER TO OTHER DETAILS AND SPECIFICATION.

U.L. LISTED SYSTEM NO. C-AJ-1044

F RATINGS - 2,3 AND 4 HR
T RATINGS - 1 HR
L RATINGS AT AMBIENT - 2 CFM/SQ. FT.
L RATINGS AT 400 F - LESS THAN 1 CFM/SQ. FT.

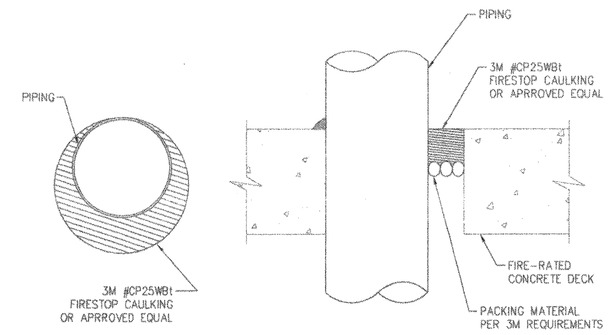

NON-INSULATED PIPE THRU RATED FLOOR/CEILING — SCALE NONE — 2

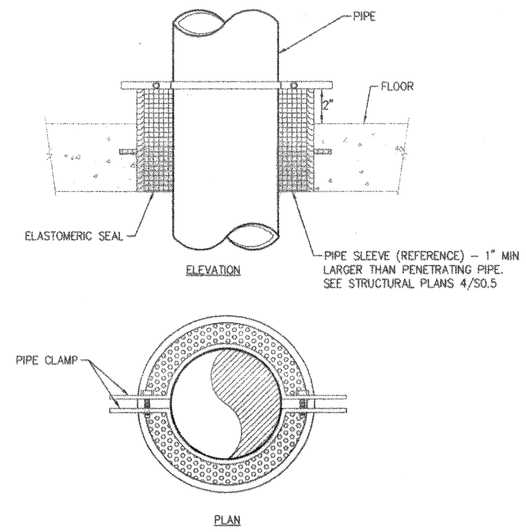

TYPICAL PIPE THROUGH FLOOR — SCALE NONE — 1

NOTE:

1. UNLESS SPECIFICALLY SHOWN ON THESE PLANS, NO STRUCTURAL MEMBER SHALL BE CUT, NEITHER DRILLED NOR NOTCHED WITHOUT PRIOR WRITTEN AUTHORIZATION FROM THE STRUCTURAL ENGINEER AND THE DIVISION OF THE STATE ARCHITECT.

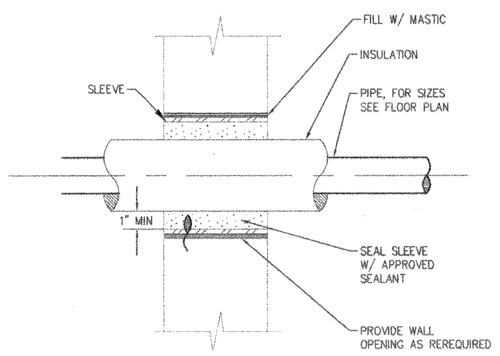

(TYP) PIPE THRU NON FIRE-RATED WALL — SCALE NONE — 8

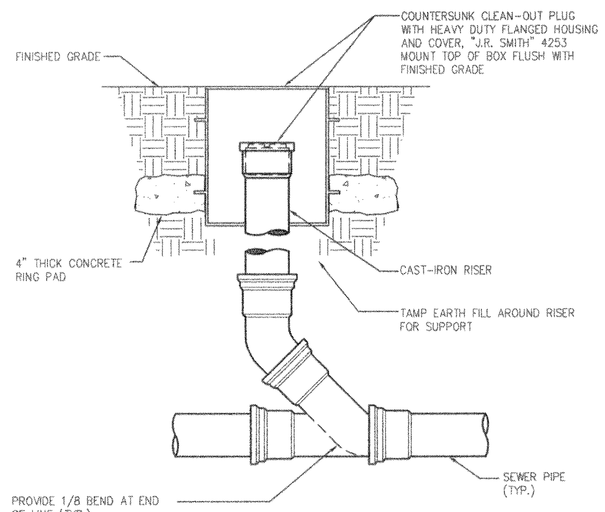

TYPICAL CLEANOUT TO GRADE DETAIL — SCALE NONE — 7

NOTES:

1. REFER TO 3M MANUFACTURER'S LITERATURE FOR ADDITIONAL REQUIREMENTS PER U.L. LISTING OR APPROVED EQUAL.
2. REFER TO ARCHITECTURAL SHEETS FOR LOCATION OF ALL FIRE-RATED WALLS.

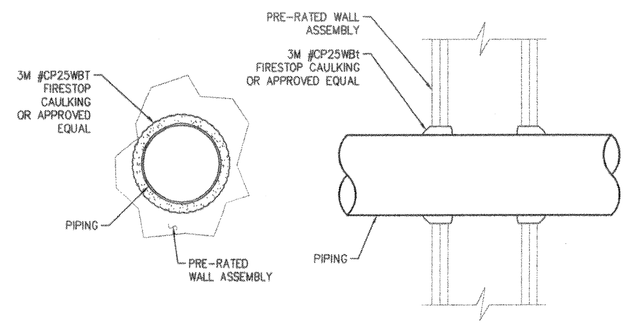

U.L. LISTED SYSTEM NO. W-L-1001

F RATINGS - 1,2,3 AND 4 HR
T RATINGS - 0,1,2,3 AND 4 HR
L RATINGS AT AMBIENT - LESS THAN 1 CFM/SQ FT.
L RATINGS AT 400 F - LESS THAN 1 CFM/SQ. FT.

(TYP) NON-INSULATED PIPE @ FIRE-RATED WALL — SCALE NONE — 6

NOTES:

1. COORDINATE WITH ROOFING CONTRACTOR/MFR TO ENSURE PROPER INSTALLATION IN ACCORDANCE WITH ALL ROOFING WARRANTEES, EXISTING OR NEW AND SO AS NOT TO VOID SUCH WARRANTEES.
2. NO VENT SHALL TERMINATE WITHIN 10'-0" OF ANY AIR INTAKE OR WINDOW.
3. SEE ARCHITECTURAL DRAWINGS FOR ROOF FLASHING DETAIL.

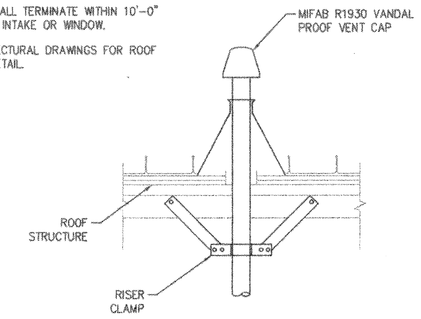

TYPICAL VENT/PIPE THRU ROOF/FLOOR — SCALE NONE — 5

NOTES:

1. ALL INTERIOR CONDENSATE SHALL BE INSULATED.

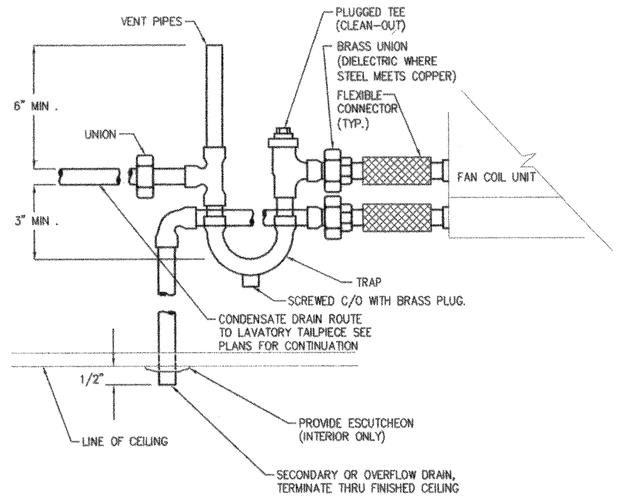

(TYP) FAN COIL UNIT ABOVE CEILING — SCALE NONE — 11

NOT USED — SCALE NONE — 12

SCALE NONE — 10

NOTES:

1. PROVIDE FOUR-WAY BRACE ABOVE THE FLEXIBLE COUPLING ON THE FIRST AND SECOND FLOOR LEVEL AT THE SECOND IT IS PREFERABLY TO BE ATTACHED TO THE ROOF STRUCTURE, BUT NOT BE ATTACHED DIRECTLY TO A PLYWOOD OR METAL DECKING
2. THE FIRE SPRINKLER CONTRACTOR/INSTALLER SHALL PROVIDE ALL REQUIRED ANCHORAGE AND LATERAL BRACING DETAILS FOR THE FIRE RISER AND OVER HEAD FIRE SPRINKLER SUPPLY PIPING. SUCH DETAILS SHALL BE SHOWN ON THE DEFERRED APPROVAL SHOP DRAWINGS WITH ANCHORAGE AND CALCULATIONS FOR FIRE SPRINKLER PIPING AND COMPONENTS. ALL DETAILS SHALL BE SUPPORTED BY ENGINEERED CALCULATIONS, PERFORMED BY A STRUCTURAL ENGINEER LICENSED IN THE STATE OF CALIFORNIA. FIRE SPRINKLER CONTRACTOR SHALL COORDINATE WITH STRUCTURAL ENGINEER PRIOR TO COMMENCEMENT OF OF FIRE SPRINKLER SYSTEM INSTALLATION.

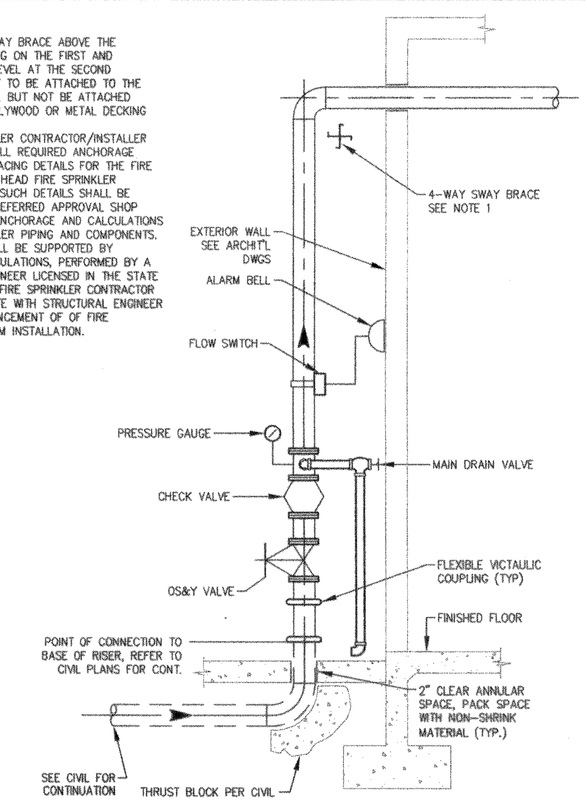

AUTOMATIC SPRINKLER RISER (DEFERRED ITEM) — SCALE NONE — 9

San Gabriel Unified School District

408 Junipero Serra
San Gabriel, CA 91776

IBI GROUP

ARCHITECTS ENGINEERS PLANNERS

ARCHITECT:
IBI Group
18401 Von Karman Avenue, Suite 110
Irvine, California 92612
Phone 949-833-5588
Fax 949-833-5511

STRUCTURAL ENGINEER:
Martin, Chow & Nakabara, Inc.
3185-C Airway Avenue
Costa Mesa, CA 92626
Phone 714-979-3003
Fax 714-979-3259

MECHANICAL ENGINEER:
Fundament & Associates
26 Executive Park #100
Irvine, CA 92614
Phone 949-251-1131
Fax 949-251-9434

ELECTRICAL ENGINEER:
FBA
3420 Irvine Avenue, Suite 200
Newport Beach, CA 92660-3189
Phone 949-852-9995
Fax 949-852-1657

CIVIL ENGINEER:
Snipes-Dye Associates
8348 Center Drive, Suite G
La Mesa, CA 91942-2910
Phone 619-697-9234
Fax 619-460-2033

LANDSCAPE ENGINEER:
IBI Group
10 Exchange Place- Suite 112
Salt Lake City UT 84111 USA
Phone 801-532-4233
Fax 801-532-4231

REGISTERED PROFESSIONAL ENGINEER — TIMOTHY G. FUNDAMENT — No. 24381 — MECHANICAL — STATE OF CALIFORNIA

IDENTIFICATION STAMP
DIV. OF THE STATE ARCHITECT
OFFICE OF REGULATION SERVICES
03-112620
AC ___ FLS VPK SS ___
DATE ___

LICENSED ARCHITECT — KEVIN S. FLEMING — NO. C28668 — 08-31-11 RENEWAL DATE — STATE OF CALIFORNIA

This drawing, as an instrument of service, is the property of the Architect and may not be reproduced without their permission and unless the reproduction carries their name. All design and other information show on this drawing are for the use on the specified project only and shall not be used otherwise without written permission of the Architect.

Written dimensions shall have precedence over scaled dimensions. Contractors shall verify and be responsible for all dimensions and conditions on the job and the Architect shall be informed of any variations from the dimensions and conditions show on the drawing. Shop drawings shall be submitted to the Architect for approval before proceeding with fabrication.

Del Mar High School

312 Del Mar Ave
San Gabriel, CA 91776

PLUMBING DETAILS

Project Number	20318
Date	FEBRUARY, 2010
Drawn By	CR
Checked By	EM

P5.0

Scale	NONE